DATASHEET

4K Fixed Dome Network Camera

IPC3618LR3-DPF28(40)-F

Key Features

Optics

Day/night functionality

Smart IR, up to 30 m (98 ft) IR distance

2D/3D DNR (Digital Noise Reduction)

Compression

Ultra 265,H.265,H.264,MJPEG

Triple streams

ROI (Region of Interest)

Network

ONVIF Conformance

Structure

Wide temperature range: -30°C ~ +60°C (-22°F ~ 140°F)

Wide voltage range of ±25%

IP67

3-Axis

Specifications

	IPC3618LR3-DPF28-F				IPC3618LR3-DPF40-F			
Camera								
Sensor	1/3", 8.0 megapixel, progressive scan, CMOS							
Lens	2.8mm@F2.0				4.0mm@2.0			
DORI Distance	Lens	Detect(m)	Observe(m)	Recognize(m)	Identify(m)			
	2.8mm	84	33.6	16.8	8.4			
	4.0mm	120	48	24	12			
Angle of view(H)	112.7°				86.5°			
Angle of View (V)	60.1°				44.1°			
Angle of View (O)	146.5°				106.4°			
Shutter	Auto/Manual, 1~1/100000 s							
Adjustment angle	Pan: 0°~360°		Tilt: 0°~80°		Rotate:0°~360°			
Min. Illumination	Colour: 0.05 Lux (2.0, AGC ON) 0 Lux with IR							
Day/Night	IR-cut filter with auto switch (ICR)							
Digital noise reduction	2D/3D DNR							
S/N	>56dB							
IR Range	Up to 30m (98 ft) IR range							
Wavelength	850nm							
IR On/Off Control	Auto/Manual							
Defog	Digital Defog							
WDR	120dB							
Video								
Video Compression	Ultra 265, H.265, H.264, MJPEG							
H.264 code profile	Baseline Profile, Main Profile							
Frame Rate	Main Stream:8MP (3840*2160): Max. 20 fps;5MP(2944*1656): Max. 30 fps; 4MP(2560*1440): Max. 30 fps; 2MP(1920*1080): Max. 30 fps Sub Stream:720P (1280*720): Max. 20 fps Third Stream:4CIF (704*576): Max. 20 fps							
Video Bit Rate	128 Kbps~16 Mbps							
OSD	Up to 4 OSDs							
Privacy Mask	Up to 4 areas							
ROI	Up to 2 areas							
Motion Detection	Up to 4 areas							
Image								
White Balance	Auto/Outdoor/Fine Tune/Sodium Lamp/Locked/Auto2							
Digital noise reduction	2D/3D DNR							
Smart IR	Support							

Flip	Normal/Vertical/Horizontal/180°
Dewarping	NA
HLC	Supported
BLC	Supported
Network	
Protocols	IPv4, IGMP, ICMP, ARP, TCP, UDP, DHCP, RTP, RTSP, RTCP, DNS, DDNS, NTP, FTP, UPnP, HTTP, HTTPS, SMTP, SSL,QoS
Compatible Integration	ONVIF (Profile S+ Profile T), API
Client	EZStation EZView EZLive
Web Browser	Plug-in required live view: IE9+, Chrome 41 and below, Firefox 52 and below
	Plug-in free live view: Chorme 57.0+, Firefox 58.0+, Edge 16+, Safari 11+
Interface	
Network	10/100M Base-TX Ethernet
Certifications	
Certifications	CE: EN 60950-1 UL: UL60950-1 FCC: FCC Part 15
General	
Power	12 V DC±25%, PoE (IEEE802.3 af)
	Power consumption: Max 5W
Dimensions (Ø x H)	Φ118×96mm (Φ4.6”×3.8”)
Net Weight	0.33kg (0.73lb)
Material	Front cover： metal Rear cover： plastic Bracket： plastic Bottom plate： metal
Working Environment	-30°C ~ +60°C (-22°F ~ 140°F), Humidity: ≤95% RH(non-condensing)
Strorage Environment	-30°C ~ +60°C (-22°F ~ 140°F), Humidity: ≤95% RH(non-condensing)
Surge Protection	2KV
Ingress Protection	IP67

Dimensions

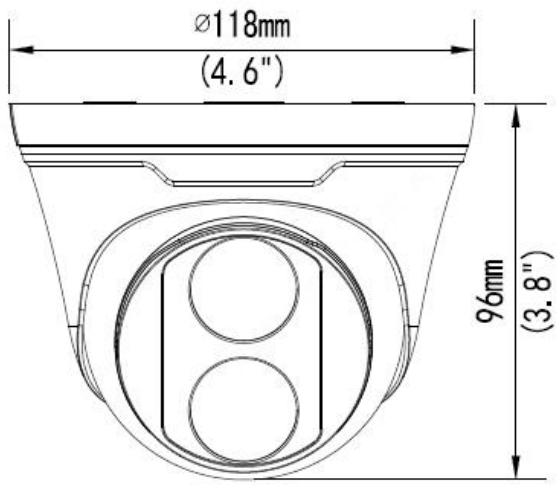

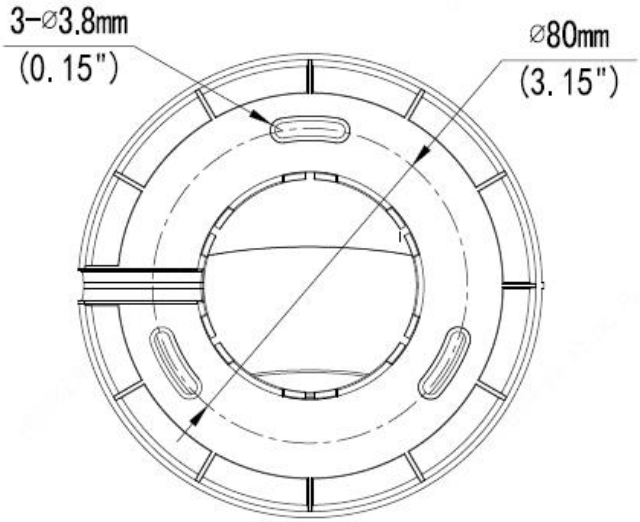

Accessories

TR-JB03-I-IN

TR-JB07/WM03-G-IN

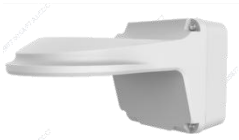

TR-WM03-D-IN

TR-UP06-IN

TR-A01-IN

TR-SE24-IN

TR-SE24-A-IN

TR-CM24-IN

Junction Mount	Pole Mount
TR-JB03-I-IN	TR-JB07/WM03-G-IN(TR-WM03-D-IN)+TR-UP06-IN

	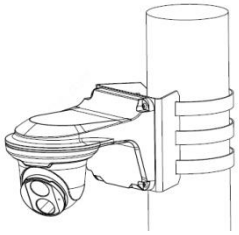
TR-CM24-IN+TR-JB03-I-IN	
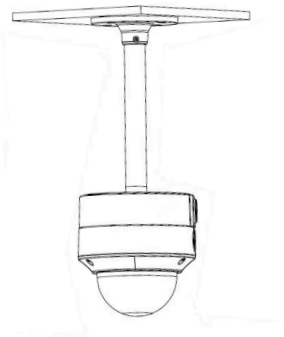	

Zhejiang Uniview Technologies Co., Ltd.

South Tower, Building 10, Wanlun Science Park, 88 Jiangling Road, Hangzhou, P.R.China 310051

Email: overseasbusiness@uniview.com; globalsupport@uniview.com

http://www.uniview.com

©2020 Zhejiang Uniview Technologies Co., Ltd. All rights reserved.

*Product specifications and availability are subject to change without notice.